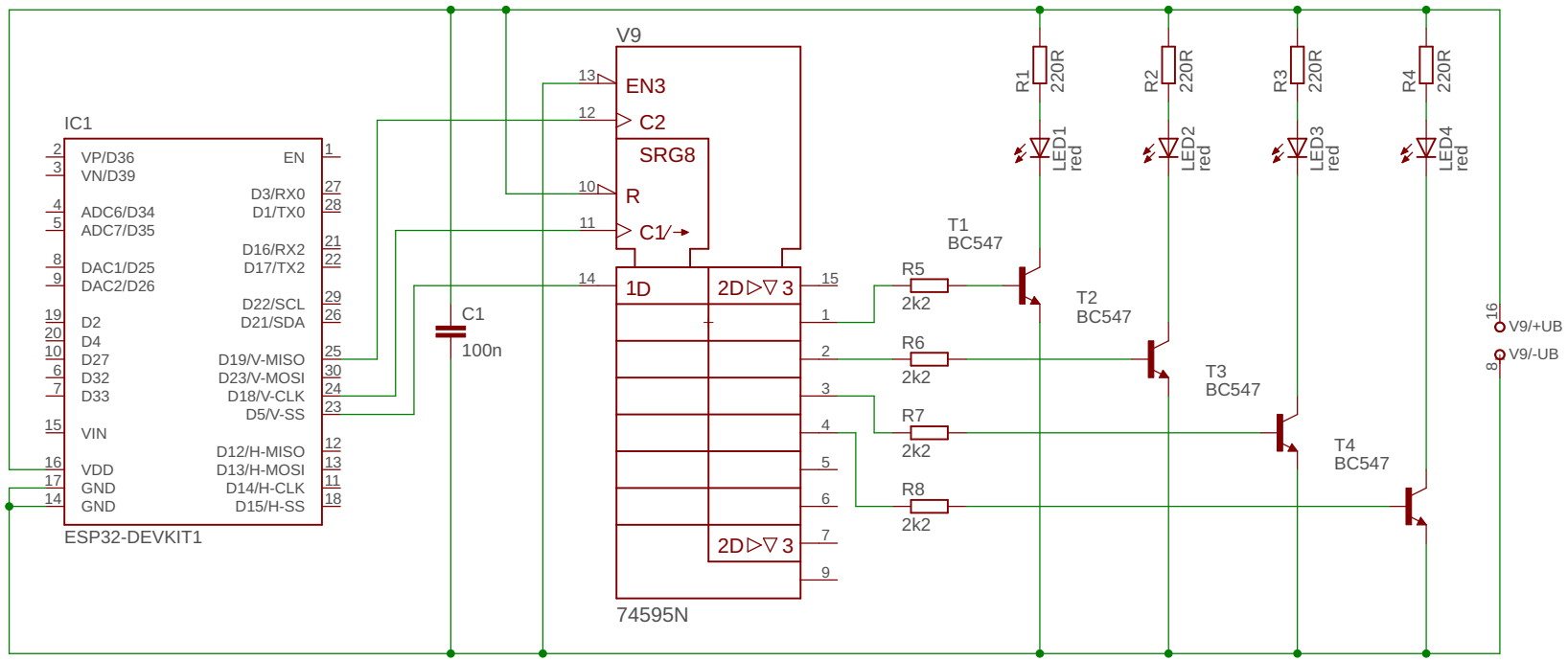

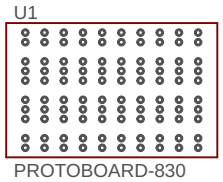

NWES - Digital Technology

TITLE: Unit 4 / Exercise 3b - Shift Register, Microcontroller

DATE: 2019-03-15

© W. Neff